Circuitry

—Muhammad Adib Surani

Brrrr - the sound of two rumbling stomachs.

"Let's stop in town for lunch. I'm in the mood for mandoo," suggests Bundy.

To your surprise, you're already in Adelaide. After eating, your journey starts again. That was rather uneventful.

Eight hours into the final leg of this crazy quest to save the world, the Chrysler Libearty slows to a stop. It stops because there is a rabbit-proof fence blocking your way, stretching miles in either direction. Getting out of the car, you and Bundy carefully inspect the almost organic design of this particular parapet. The strands of the wires constituting the fence braid and weave irregularly, *koalaescing* into a massive knotted ball where it cuts across the road. You stare deep into this hollow metallic sphere and spot in its center what appears to be a small circuit board.
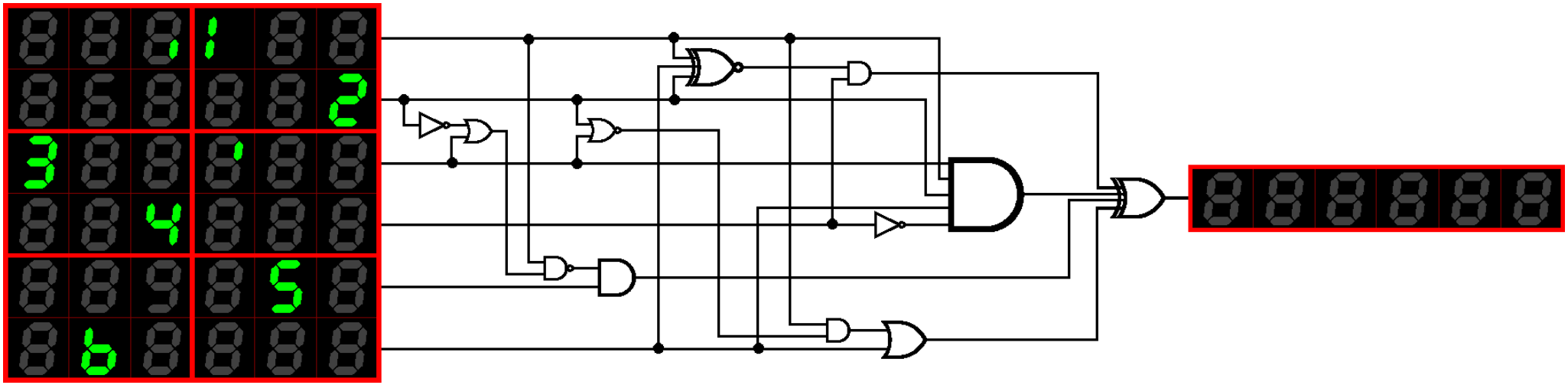
You obviously need to open this fence to get to Green Patch Hill.